DRAWING 675

Construction Details For Customer Installed Electric Facilities Padmount Equipment Protection

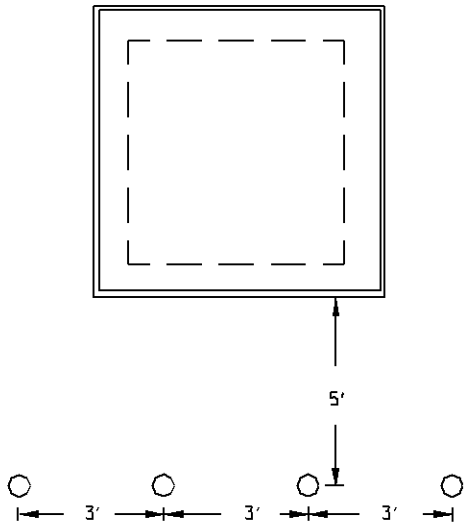

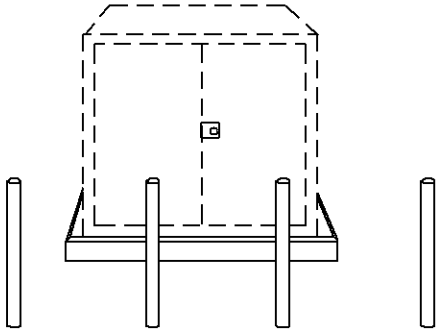

PROTECTIVE POSTS MAY BE 4" TO 6" STEEL PIPE. ALL MUST BE FILLED WITH CONCRETE.

HEIGHT OF PROTECTION POST WILL VARY DEPENDING ON THE INSTALLATION.

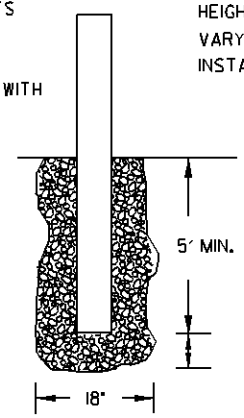

- FOR BARE POSTS WITH NO CROSSPIECES - MINIMUM HEIGHT IS 3.0'
- FOR POSTS WITH CROSS PIECES - MINIMUM HEIGHT IS 2.5'

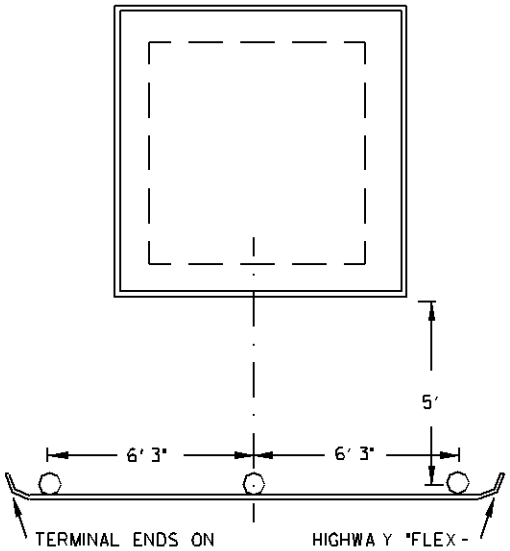

TERMINAL ENDS ON GUARD RAIL BARRIERS ARE OPTIONAL

HIGHWAY "FLEX-BEAM" GUARDRAIL (10 OR 12 GA.)

GUARD POSTS MUST BE SPACED TO ALLOW UNRESTRICTED ACCESS TO THE PRIMARY COMPARTMENT OF THE TRANSFORMER. CONSULT WITH THE DUKE ENERGY REPRESENTATIVE FOR PROPER SPACING AND PLACEMENT.

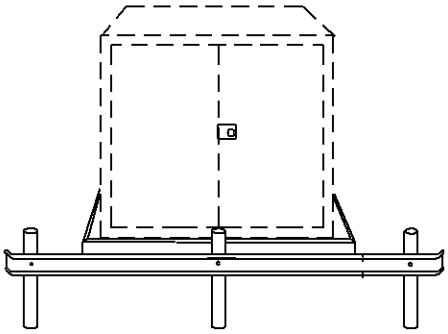

PROTECTIVE POSTS OR BARRIERS MAY ALSO BE REQUIRED ALONG THE SIDES OF DUKE ENERGY OWNED PADMOUNT EQUIPMENT. SIDE PROTECTION SHALL BE LOCATED AT LEAST 3 FEET AWAY FROM THE BACK OR SIDES OF THE EQUIPMENT CABINET OR AS DIRECTED BY THE DUKE ENERGY REPRESENTATIVE.

04/02/07